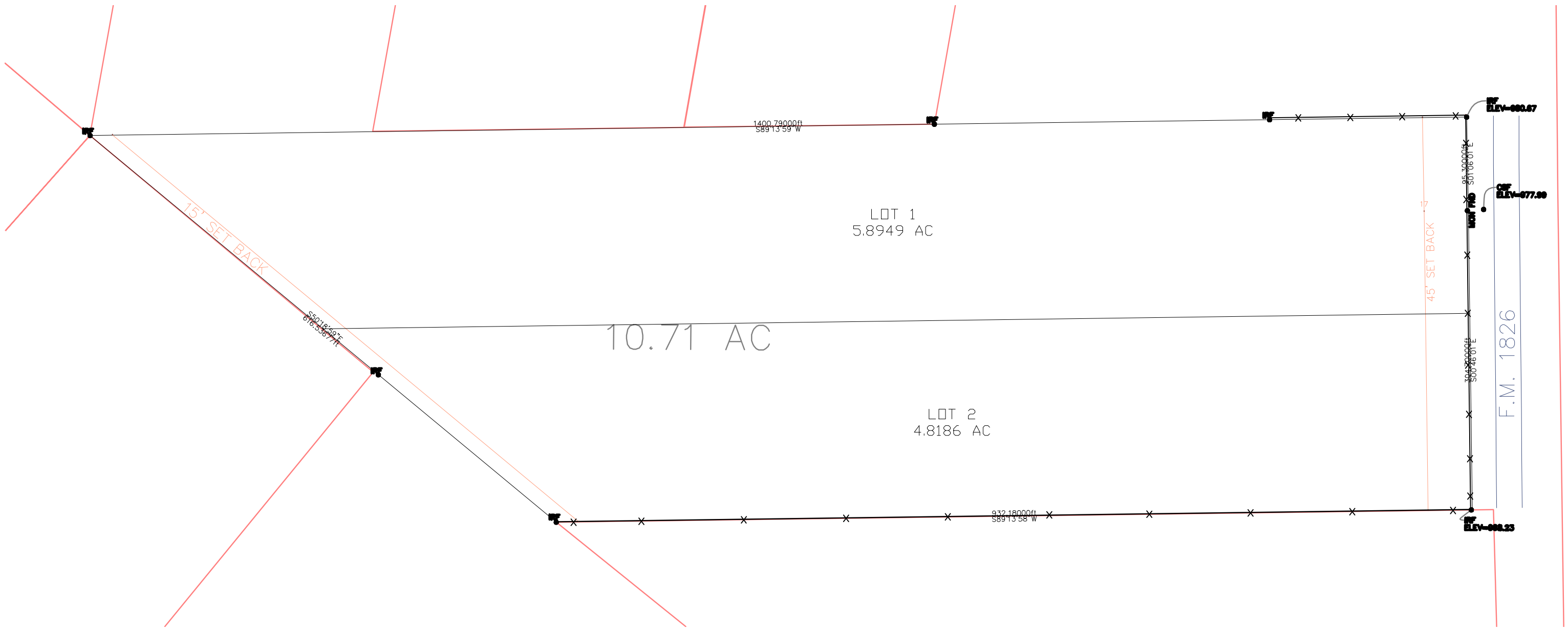
1400.79000ft
S89°13'59"W
15' SET BACK
S50°18'59"E
676.36871ft
LOT 1
5.8949 AC
10.71 AC
LOT 2
4.8186 AC
932.18000ft
S89°13'58"W
45' SET BACK
S00°46'01"E
F.M. 1826
ELEV=660.67
ELEV=677.99
ELEV=668.23